DATA SHEET

74F241
Octal buffer (3-state)

Product data
Supersedes data of 2002 Mar 18

2004 Feb 25

Philips
Semiconductors

PHILIPS

Octal buffer 74F241

FEATURES

- Octal bus interface
- 3-state buffer outputs sink 64 mA
- 15 mA source current

DESCRIPTION

The 74F241 is an octal buffer that is ideal for driving bus lines of buffer memory address registers. The outputs are all capable of sinking 64 mA and sourcing up to 15 mA. The device features two output enables, each controlling four of the 3-state outputs.

TYPE	TYPICAL PROPAGATION DELAY	TYPICAL SUPPLY CURRENT (TOTAL)
74F241	4.0 ns	53 mA

ORDERING INFORMATION

DESCRIPTION	ORDER CODE	PKG DWG #
	COMMERCIAL RANGE V_{CC} = 5 V ±10%, T_{amb} = 0 °C to +70 °C	
20-pin plastic DIP	N74F241N	SOT146-1
20-pin plastic SOL	N74F241D	SOT163-1

INPUT AND OUTPUT LOADING AND FAN OUT TABLE

PINS	DESCRIPTION	74F (U.L.) HIGH/LOW	LOAD VALUE HIGH/LOW
Ian, Ibn	Data inputs	1.0/2.67	20 μA/1.6 mA
$\overline{OE}$a, $\overline{OE}$b	Output enable input	1.0/1.67	20 μA/1 mA
Yan, Ybn	Data outputs	750/106.7	15 mA/64 mA

Note to input and output loading and fan out table

One (1.0) FAST unit load is defined as: 20 μA in the HIGH state and 0.6 mA in the LOW state.

PIN CONFIGURATION

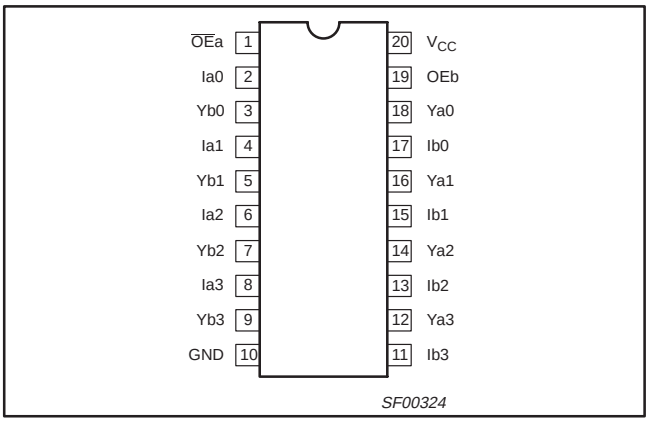

LOGIC SYMBOL

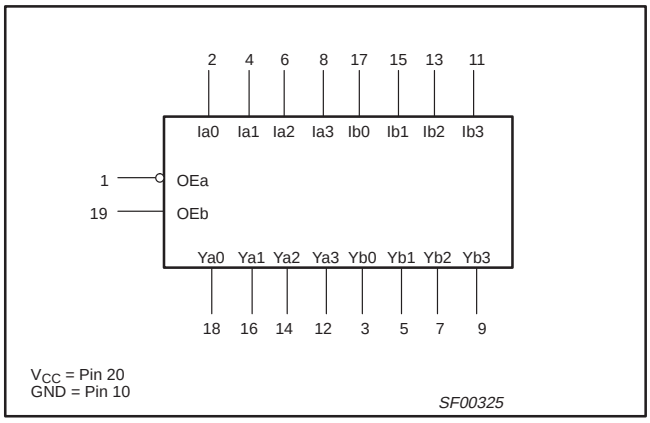

IEC/IEEE SYMBOL

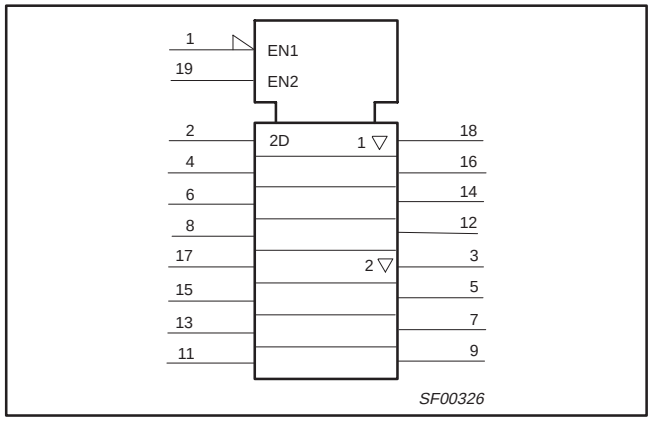

LOGIC DIAGRAM

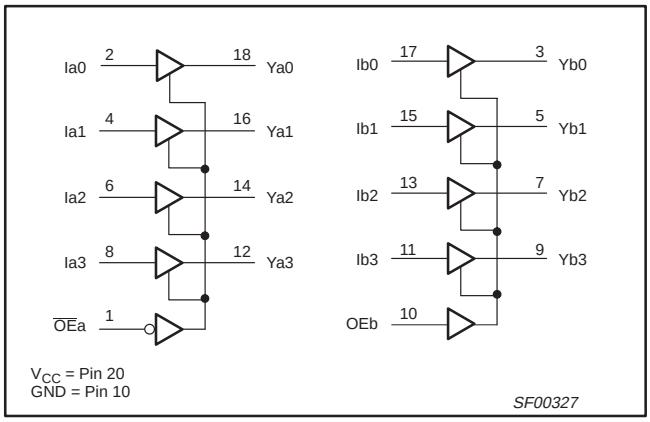

FUNCTION TABLE

INPUTS				OUTPUTS	
$\overline{OE}a$	Ia	OEb	Ib	Ya	Yb
L	L	H	L	L	L
L	H	H	H	H	H
H	X	L	X	Z	Z

NOTES:
H = High voltage level
L = Low voltage level
X = Don’t care
Z = High impedance “off” state

ABSOLUTE MAXIMUM RATINGS

(Operation beyond the limit set forth in this table may impair the useful life of the device.
Unless otherwise noted these limits are over the operating free air temperature range.)

SYMBOL	PARAMETER	RATING	UNIT
V_{CC}	Supply voltage	–0.5 to +7.0	V
V_{IN}	Input voltage	–0.5 to +7.0	V
I_{IN}	Input current	–30 to +5	mA
V_{OUT}	Voltage applied to output in high output state	–0.5 to V_{CC}	V
I_{OUT}	Current applied to output in low output state	128	mA
T_{amb}	Operating free air temperature range	0 to +70	°C
T_{stg}	Storage temperature range	–65 to +150	°C

RECOMMENDED OPERATING CONDITIONS

SYMBOL	PARAMETER	LIMITS			UNIT
		MIN	NOM	MAX	
V_{CC}	Supply voltage	4.5	5.0	5.5	V
V_{IH}	High-level input voltage	2.0			V
V_{IL}	Low-level input voltage			0.8	V
I_{Ik}	Input clamp current			–18	mA
I_{OH}	High-level output current			–15	mA
I_{OL}	Low-level output current			64	mA
T_{amb}	Operating free air temperature range	0		+70	°C

DC ELECTRICAL CHARACTERISTICS

(Over recommended operating free-air temperature range unless otherwise noted.)

SYMBOL	PARAMETER		TEST CONDITIONS[1]			LIMITS			UNIT
						MIN	TYP[2]	MAX	
V_{OH}	High-level output voltage		V_{CC} = MIN; V_{IL} = MAX; V_{IH} = MIN	I_{OH} = –3 mA	±10%V_{CC}	2.4			V
					±5%V_{CC}	2.7	3.4		V
				I_{OH} = –15 mA	±10%V_{CC}	2.0			V
					±5%V_{CC}	2.0			V
V_{OL}	Low-level output voltage		V_{CC} = MIN; V_{IL} = MAX; V_{IH} = MIN	I_{OL} = MAX	±10%V_{CC}			0.50	V
					±5%V_{CC}		0.42	0.50	V
V_{IK}	Input clamp voltage		V_{CC} = MIN; I_I = I_{IK}				–0.73	–1.2	V
I_I	Input current at maximum input voltage		V_{CC} = MAX; V_I = 7.0 V					100	μA
I_{IH}	High-level input current		V_{CC} = MAX; V_I = 2.7 V					20	μA
I_{IL}	Low-level input current	$\overline{OE}$a, OEb	V_{CC} = MAX; V_I = 0.5 V					–1.0	mA
		Ian, Ibn						–1.6	mA
I_{OZH}	Off-state output current, high-level voltage applied		V_{CC} = MAX, V_O = 2.7 V					50	μA
I_{OZL}	Off-state output current, low-level voltage applied		V_{CC} = MAX, V_O = 0.5 V					–50	μA
I_{OS}	Short-circuit output current[3]		V_{CC} = MAX			–100		–225	mA
I_{CC}	Supply current (total)	I_{CCH}	V_{CC} = MAX				40	60	mA
		I_{CCL}					60	90	mA
		I_{CCZ}					65	90	mA

NOTES:

1. For conditions shown as MIN or MAX, use the appropriate value specified under recommended operating conditions for the applicable type.
2. All typical values are at V_{CC} = 5 V, T_{amb} = 25 °C.
3. Not more than one output should be shorted at a time. For testing I_{OS}, the use of high-speed test apparatus and/or sample-and-hold techniques are preferable in order to minimize internal heating and more accurately reflect operational values. Otherwise, prolonged shorting of a high output may raise the chip temperature well above normal and thereby cause invalid readings in other parameter tests. In any sequence of parameter tests, I_{OS} tests should be performed last.

AC ELECTRICAL CHARACTERISTICS

SYMBOL	PARAMETER	TEST CONDITION	LIMITS					UNIT
			T_{amb} = +25 °C V_{CC} = +5.0 V C_L = 50 pF; R_L = 500 Ω			T_{amb} = 0 °C to +70 °C V_{CC} = +5.0 V ± 10% C_L = 50 pF; R_L = 500 Ω		
			MIN	TYP	MAX	MIN	MAX	
t_{PLH} t_{PHL}	Propagation delay Ian, Ibn to Yn	Waveform 1	2.5 2.5	4.0 4.0	5.2 5.2	2.5 2.5	6.2 6.5	ns
t_{PZH} t_{PZL}	Output enable time to high or low level	Waveform 2, 3	2.0 2.0	4.0 5.0	5.7 7.0	2.0 2.0	6.7 8.0	ns
t_{PHZ} t_{PLZ}	Output disable time from high or low level	Waveform 2, 3	2.0 2.0	4.0 4.0	6.0 6.0	2.0 2.0	7.0 7.0	ns

NOTES:

1. $|t_{PN}$ actual – t_{PM} actual$|$ for any output compared to any other output where N and M are either LH or HL.

AC WAVEFORMS

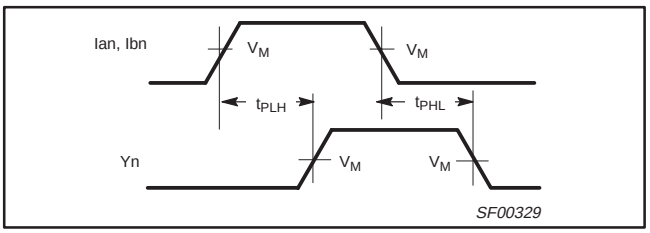

Waveform 1. Propagation delay

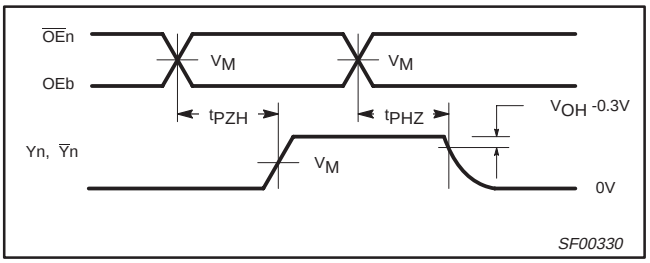

Waveform 2. 3-state output enable time to high level and output disable time from high level

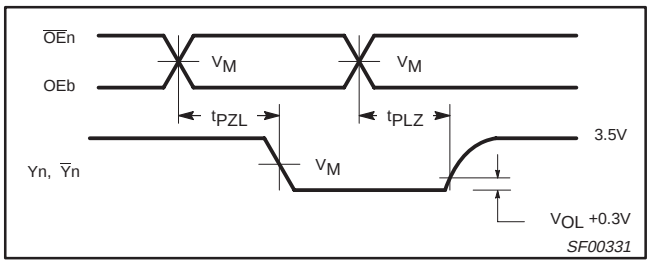

Waveform 3. 3-state output enable time to low level and output disable time from low level

Notes to AC waveforms

1. For all waveforms, V_M = 1.5 V.

TEST CIRCUIT AND WAVEFORMS

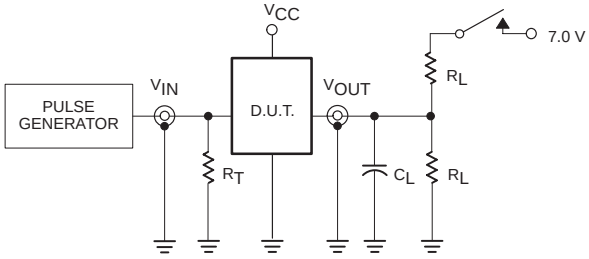

Test Circuit for Open Collector Outputs

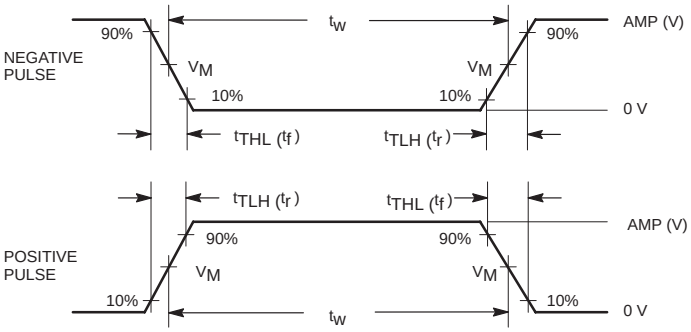

Input Pulse Definition

SWITCH POSITION

TEST	SWITCH
t_{PLZ}	closed
t_{PZL}	closed
All other	open

DEFINITIONS:

R_L = Load resistor; see AC electrical characteristics for value.

C_L = Load capacitance includes jig and probe capacitance; see AC electrical characteristics for value.

R_T = Termination resistance should be equal to Z_{OUT} of pulse generators.

family	INPUT PULSE REQUIREMENTS					
	amplitude	V_M	rep. rate	t_w	t_{TLH}	t_{THL}
74F	3.0 V	1.5 V	1 MHz	500 ns	2.5 ns	2.5 ns

SF00128

DIP20: plastic dual in-line package; 20 leads (300 mil) **SOT146-1**

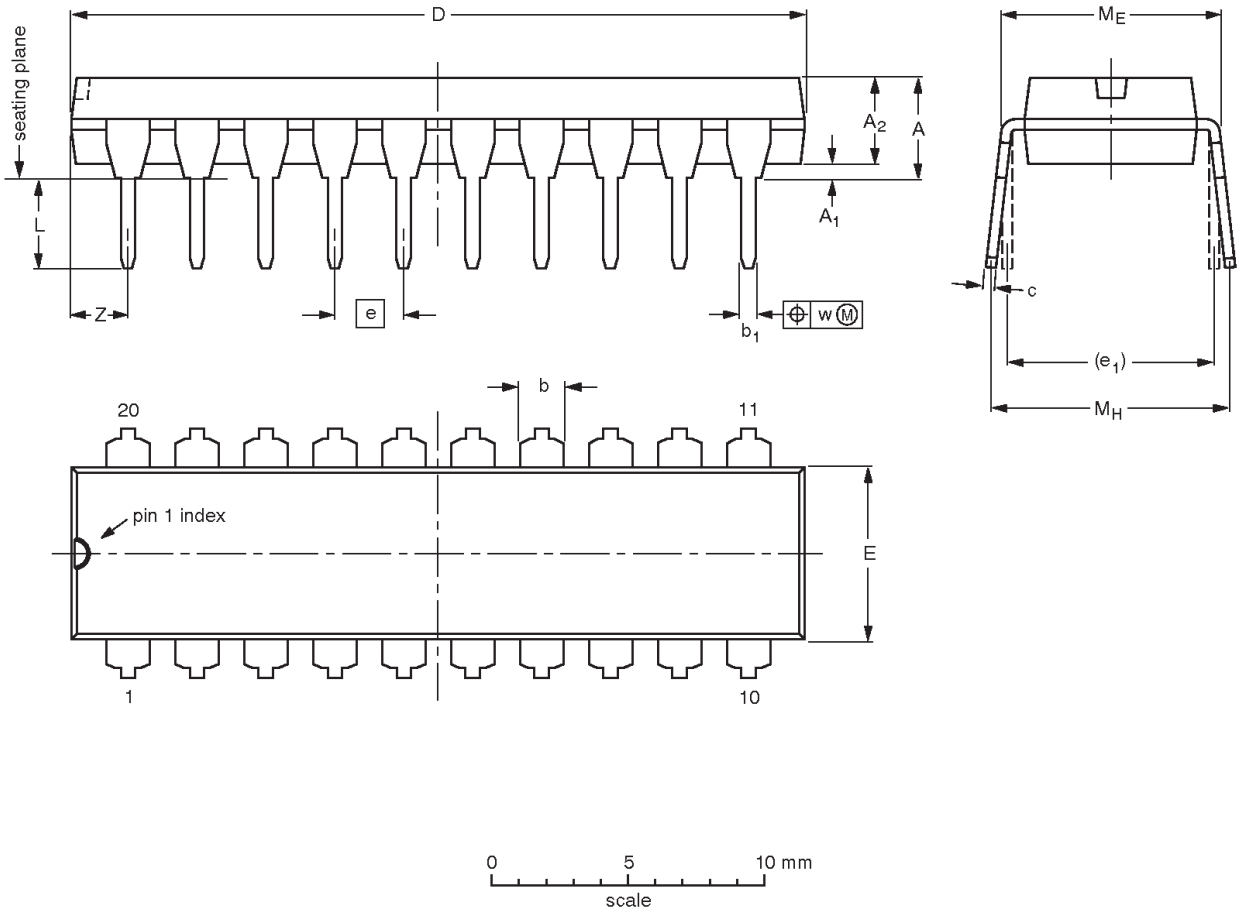

DIMENSIONS (inch dimensions are derived from the original mm dimensions)

UNIT	A max.	A_1 min.	A_2 max.	b	b_1	c	D (1)	E (1)	e	e_1	L	M_E	M_H	w	Z (1) max.
mm	4.2	0.51	3.2	1.73 1.30	0.53 0.38	0.36 0.23	26.92 26.54	6.40 6.22	2.54	7.62	3.60 3.05	8.25 7.80	10.0 8.3	0.254	2
inches	0.17	0.02	0.13	0.068 0.051	0.021 0.015	0.014 0.009	1.060 1.045	0.25 0.24	0.1	0.3	0.14 0.12	0.32 0.31	0.39 0.33	0.01	0.078

Note

1. Plastic or metal protrusions of 0.25 mm (0.01 inch) maximum per side are not included.

OUTLINE VERSION	REFERENCES				EUROPEAN PROJECTION	ISSUE DATE
	IEC	JEDEC	JEITA			
SOT146-1		MS-001	SC-603			~~99-12-27~~ 03-02-13

SO20: plastic small outline package; 20 leads; body width 7.5 mm **SOT163-1**

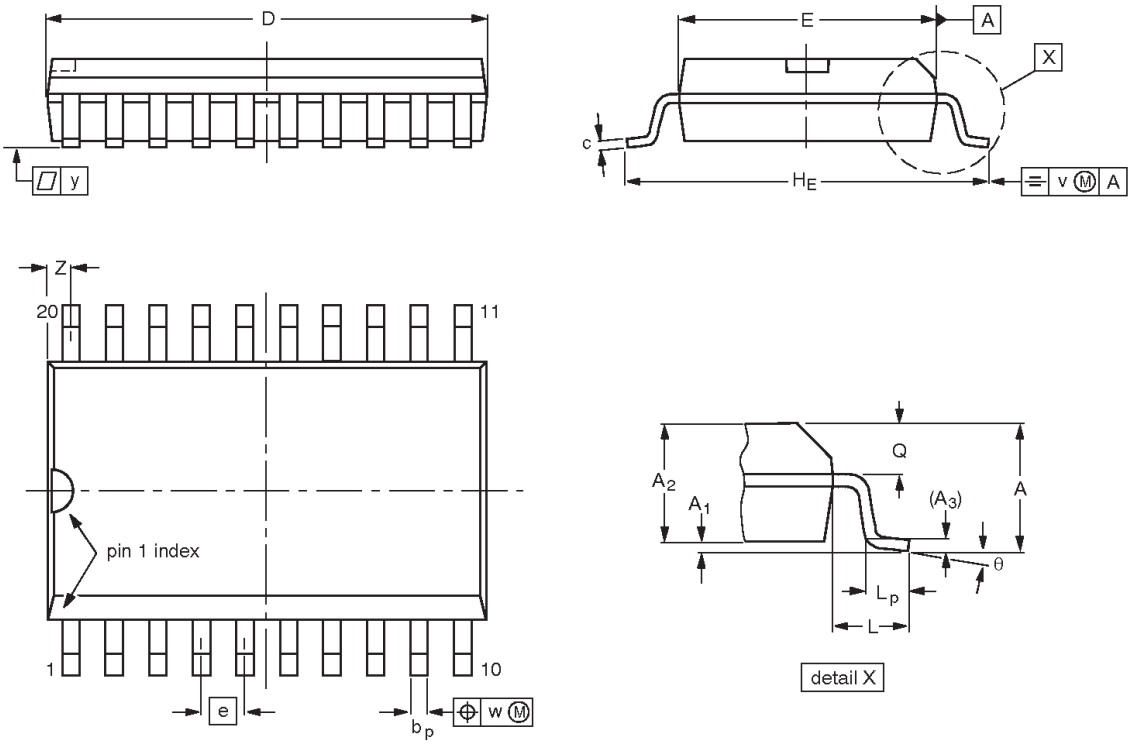

DIMENSIONS (inch dimensions are derived from the original mm dimensions)

UNIT	A max.	A_1	A_2	A_3	b_p	c	D (1)	E (1)	e	H_E	L	L_p	Q	v	w	y	Z (1)	θ
mm	2.65	0.3 0.1	2.45 2.25	0.25	0.49 0.36	0.32 0.23	13.0 12.6	7.6 7.4	1.27	10.65 10.00	1.4	1.1 0.4	1.1 1.0	0.25	0.25	0.1	0.9 0.4	8° 0°
inches	0.1	0.012 0.004	0.096 0.089	0.01	0.019 0.014	0.013 0.009	0.51 0.49	0.30 0.29	0.05	0.419 0.394	0.055	0.043 0.016	0.043 0.039	0.01	0.01	0.004	0.035 0.016	

Note

1. Plastic or metal protrusions of 0.15 mm (0.006 inch) maximum per side are not included.

OUTLINE VERSION	REFERENCES				EUROPEAN PROJECTION	ISSUE DATE
	IEC	JEDEC	JEITA			
SOT163-1	075E04	MS-013				~~99-12-27~~ 03-02-19

REVISION HISTORY

Rev	Date	Description
_4	20040225	**Product data (9397 750 12965); supersedes data sheet 74F240_241_241A_3 of 2002 Mar 18 (9397 750 09571).** Modifications: ● Delete all references to 74F241A (product discontinued). ● Separate 74F240 and 74F241 into standalone data sheets.
_3	20020318	**Product data (9397 750 09571); supersedes previous version.**

Data sheet status

Level	Data sheet status [1]	Product status [2] [3]	Definitions
I	Objective data	Development	This data sheet contains data from the objective specification for product development. Philips Semiconductors reserves the right to change the specification in any manner without notice.
II	Preliminary data	Qualification	This data sheet contains data from the preliminary specification. Supplementary data will be published at a later date. Philips Semiconductors reserves the right to change the specification without notice, in order to improve the design and supply the best possible product.
III	Product data	Production	This data sheet contains data from the product specification. Philips Semiconductors reserves the right to make changes at any time in order to improve the design, manufacturing and supply. Relevant changes will be communicated via a Customer Product/Process Change Notification (CPCN).

[1] Please consult the most recently issued data sheet before initiating or completing a design.

[2] The product status of the device(s) described in this data sheet may have changed since this data sheet was published. The latest information is available on the Internet at URL http://www.semiconductors.philips.com.

[3] For data sheets describing multiple type numbers, the highest-level product status determines the data sheet status.

Definitions

Short-form specification — The data in a short-form specification is extracted from a full data sheet with the same type number and title. For detailed information see the relevant data sheet or data handbook.

Limiting values definition — Limiting values given are in accordance with the Absolute Maximum Rating System (IEC 60134). Stress above one or more of the limiting values may cause permanent damage to the device. These are stress ratings only and operation of the device at these or at any other conditions above those given in the Characteristics sections of the specification is not implied. Exposure to limiting values for extended periods may affect device reliability.

Application information — Applications that are described herein for any of these products are for illustrative purposes only. Philips Semiconductors make no representation or warranty that such applications will be suitable for the specified use without further testing or modification.

Disclaimers

Life support — These products are not designed for use in life support appliances, devices, or systems where malfunction of these products can reasonably be expected to result in personal injury. Philips Semiconductors customers using or selling these products for use in such applications do so at their own risk and agree to fully indemnify Philips Semiconductors for any damages resulting from such application.

Right to make changes — Philips Semiconductors reserves the right to make changes in the products—including circuits, standard cells, and/or software—described or contained herein in order to improve design and/or performance. When the product is in full production (status 'Production'), relevant changes will be communicated via a Customer Product/Process Change Notification (CPCN). Philips Semiconductors assumes no responsibility or liability for the use of any of these products, conveys no license or title under any patent, copyright, or mask work right to these products, and makes no representations or warranties that these products are free from patent, copyright, or mask work right infringement, unless otherwise specified.

Contact information

For additional information please visit
http://www.semiconductors.philips.com. Fax: **+31 40 27 24825**

For sales offices addresses send e-mail to:
sales.addresses@www.semiconductors.philips.com.

© Koninklijke Philips Electronics N.V. 2004
All rights reserved. Printed in U.S.A.

Date of release: 02-04

Document order number: 9397 750 12965

Let's make things better.

Philips Semiconductors

PHILIPS